CADDEXPERT.COM

111

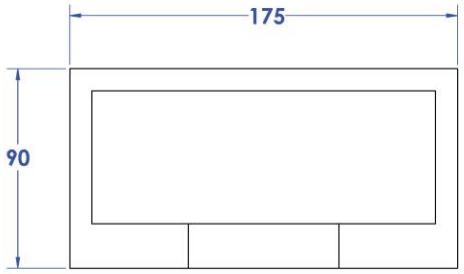

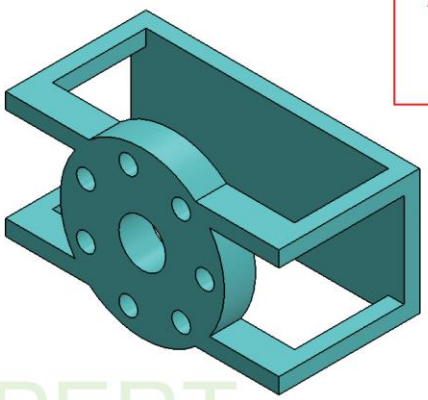

CADDEXPERT

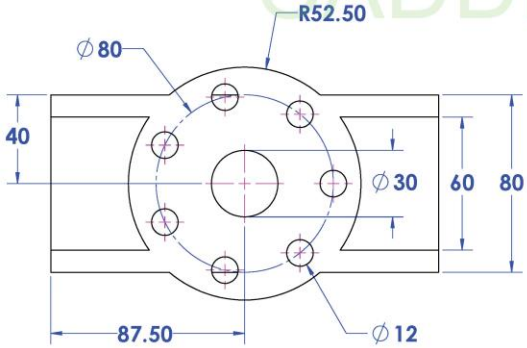

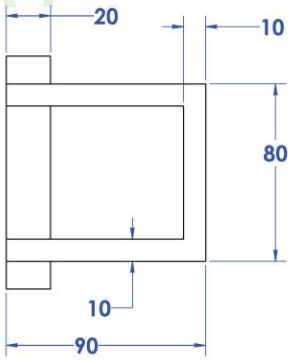

CADDEXPERT.COM

CADDEXPERT.COM

104

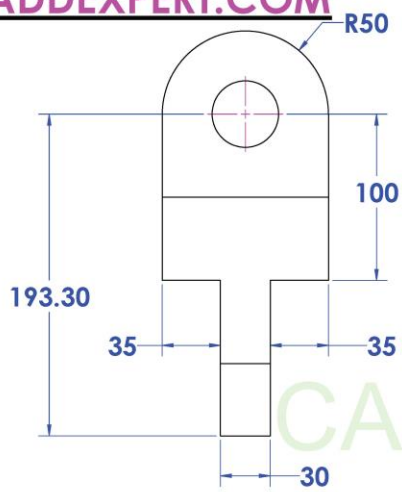

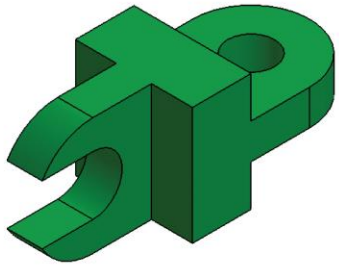

CADDEXPERT

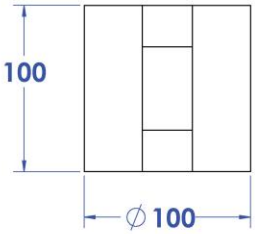

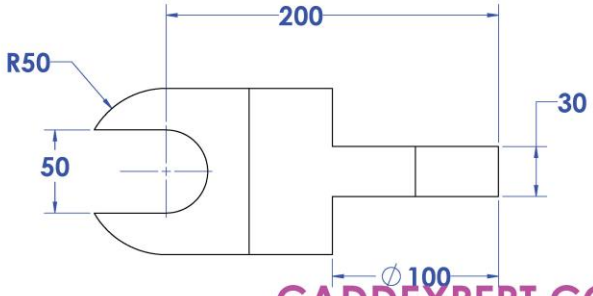

CADDEXPERT.COM

CADDEXPERT.COM

132

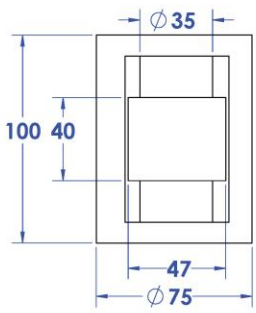

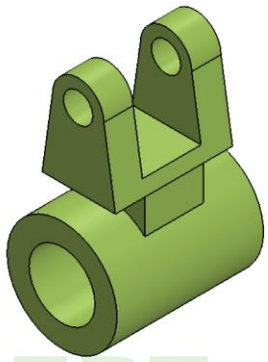

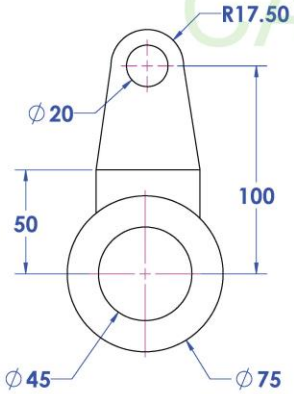

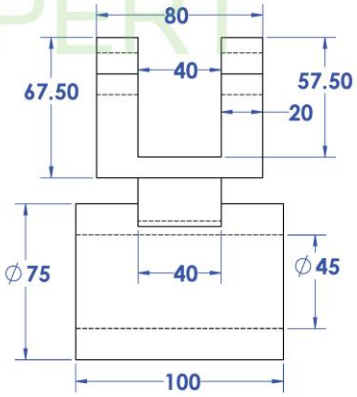

CADDEXPERT

CADDEXPERT.COM

CADDEXPERT.COM

192

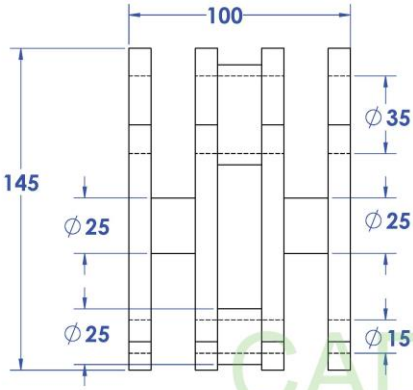

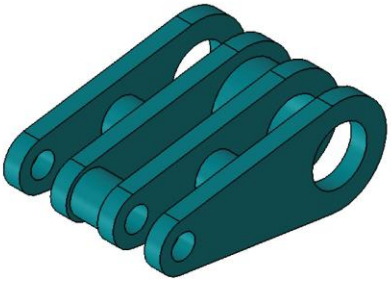

CADDEXPERT

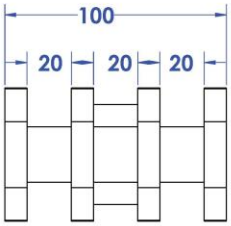

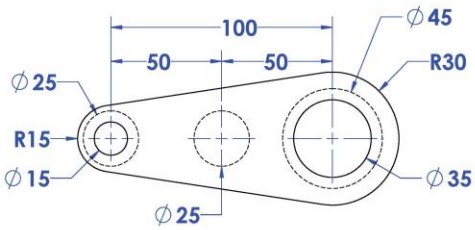

CADDEXPERT.COM

CADDEXPERT.COM

172

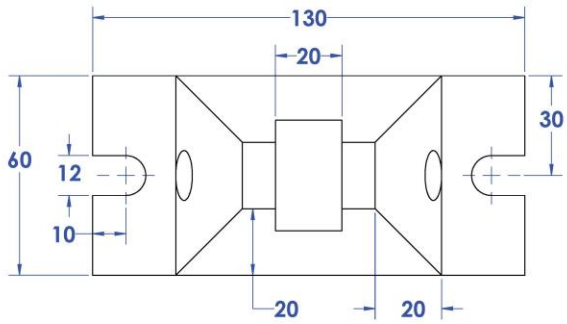

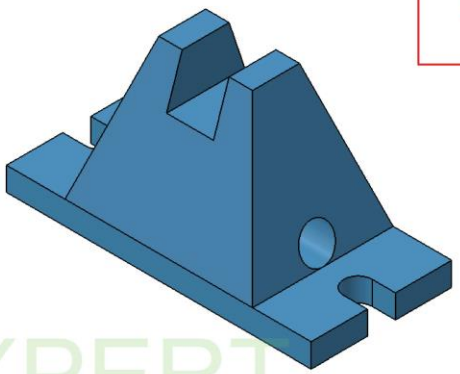

CADDEXPERT

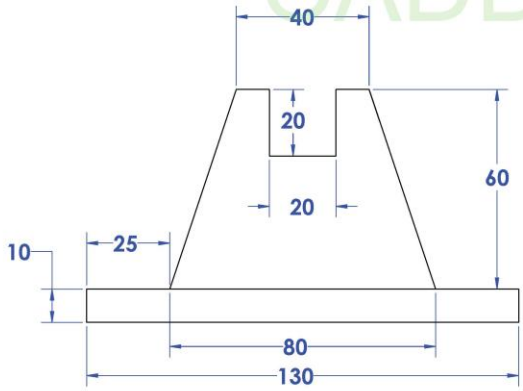

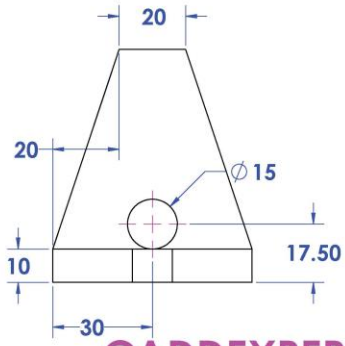

CADDEXPERT.COM

CADDEXPERT.COM

173

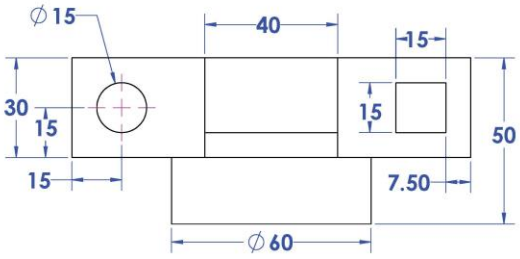

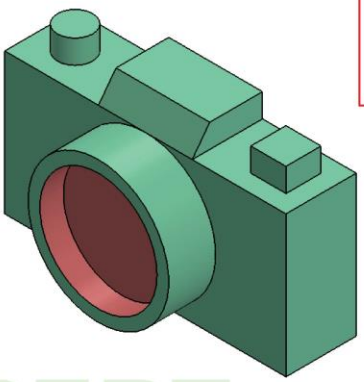

CADDEXPERT

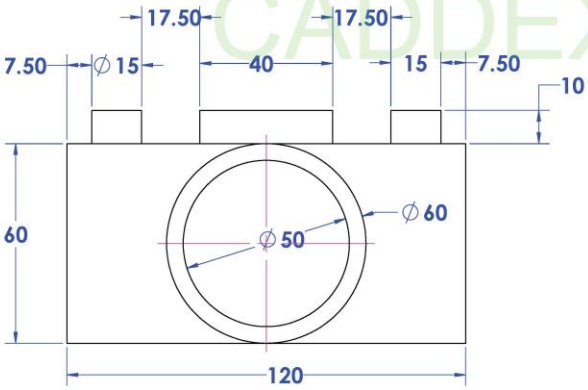

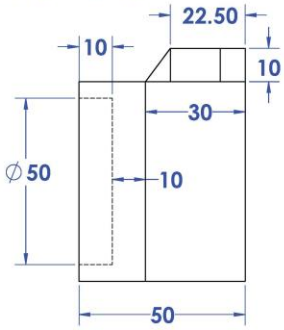

CADDEXPERT.COM

CADDEXPERT.COM

135

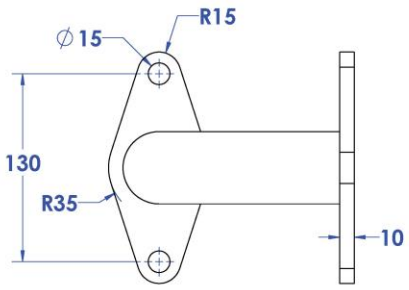

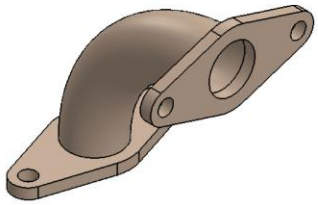

CADDEXPERT

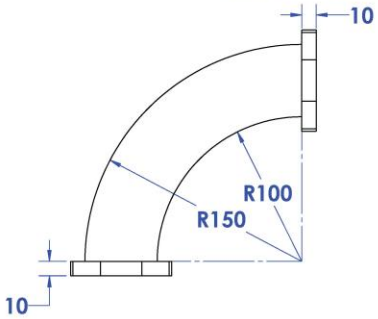

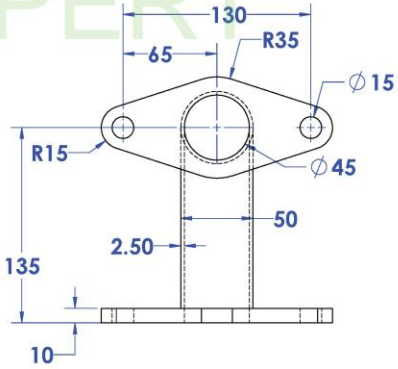

CADDEXPERT.COM

CADDEXPERT.COM

170

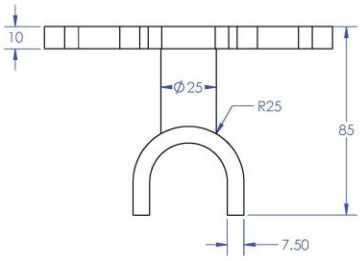

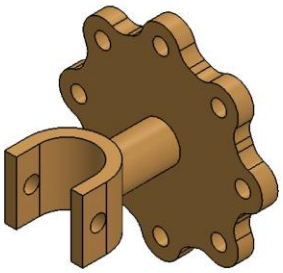

CADDEXPERT

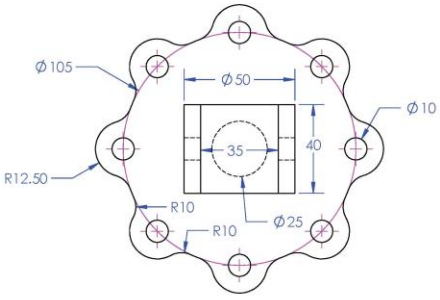

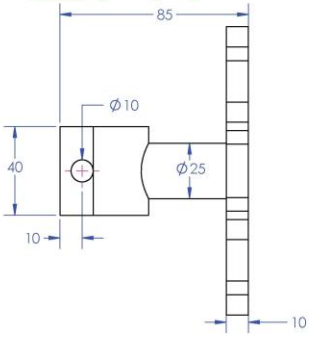

CADDEXPERT.COM

CADDEXPERT.COM

182

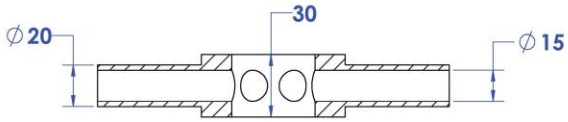

SECTION B-B
SCALE 1 : 1.6

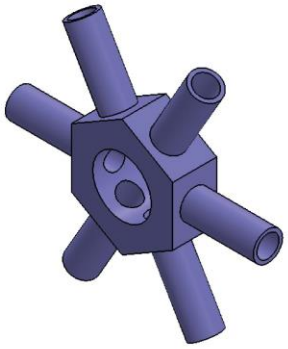

CADDEXPERT

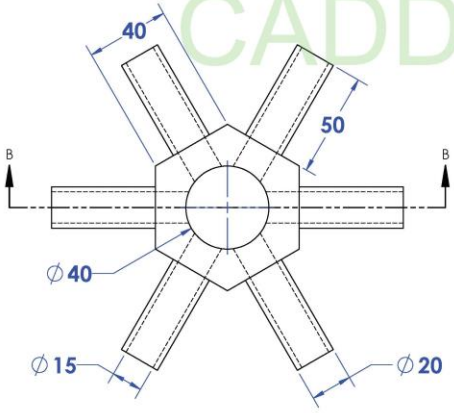

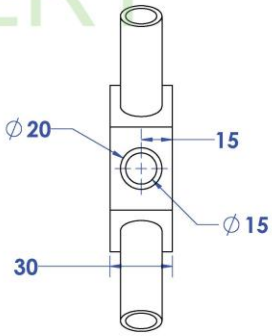

CADDEXPERT.IN

CADDEXPERT.COM

186

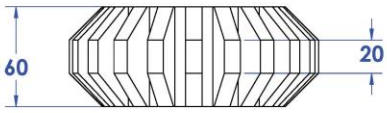

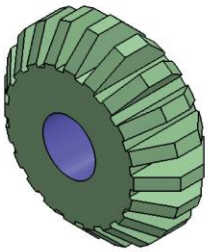

CADDEXPERT

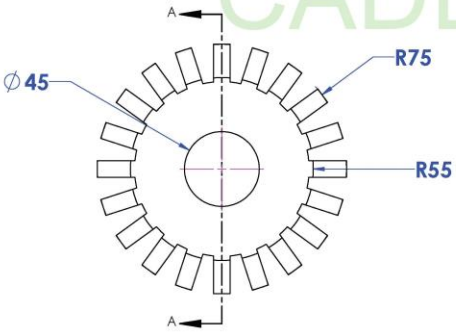

SECTION A-A

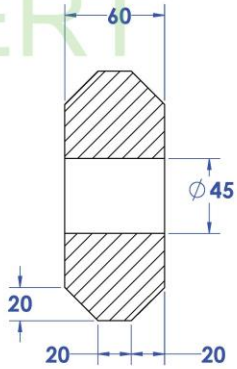

CADDEXPERT.IN

CADDEXPERT.COM

197

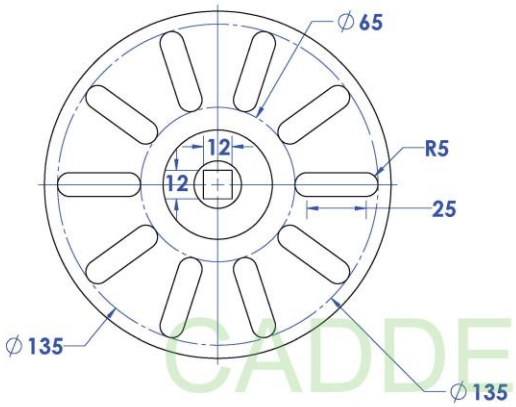

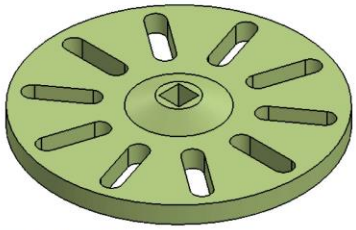

CADDEXPERT

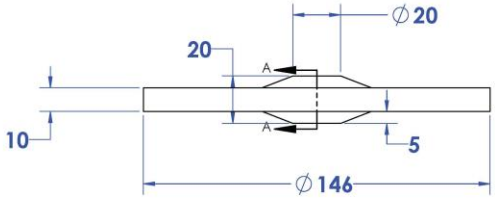

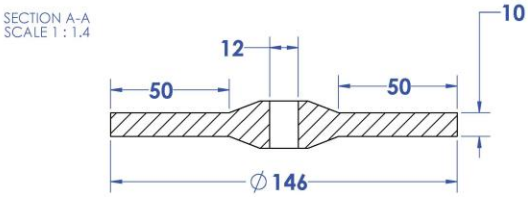

CADDEXPERT.COM

CADDEXPERT.COM

175

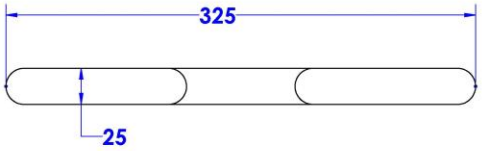

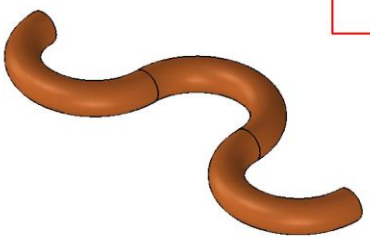

CADDEXPERT

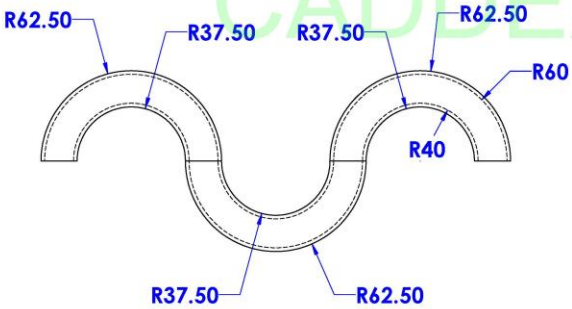

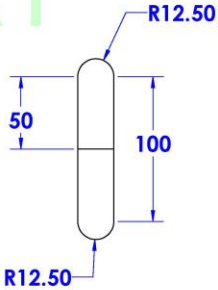

CADDEXPERT.COM

CADDEXPERT.COM

112

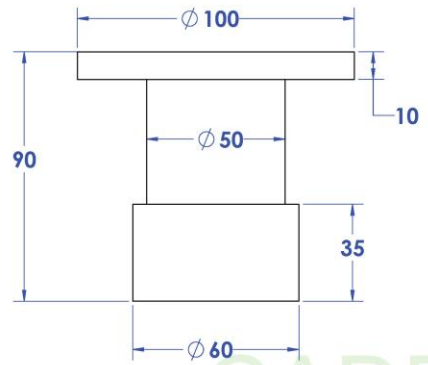

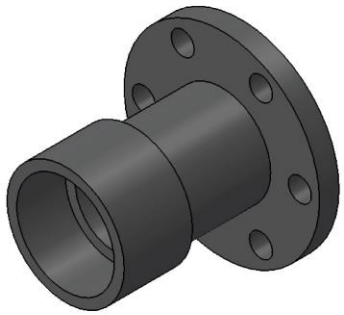

CADDEXPERT

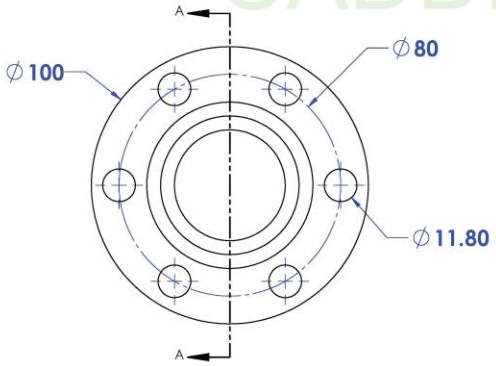

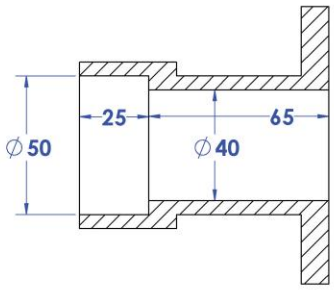

SECTION A-A
SCALE 1 : 1.2

CADDEXPERT.COM

CADDEXPERT.COM

113

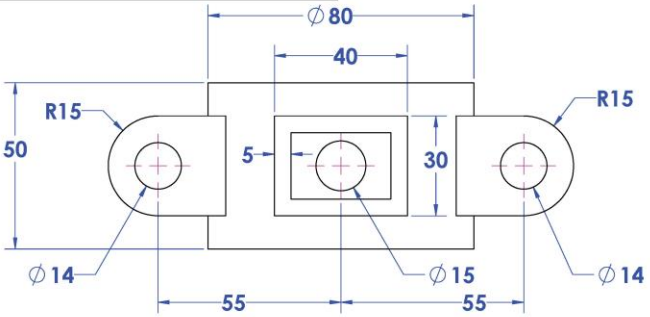

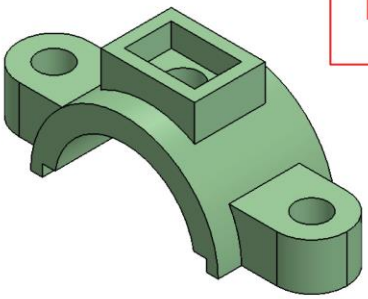

CADDEXPERT

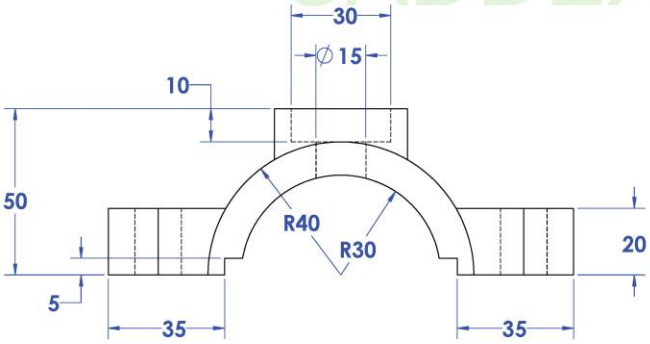

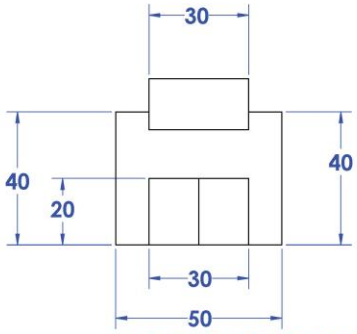

CADDEXPERT.COM

CADDEXPERT.COM

143

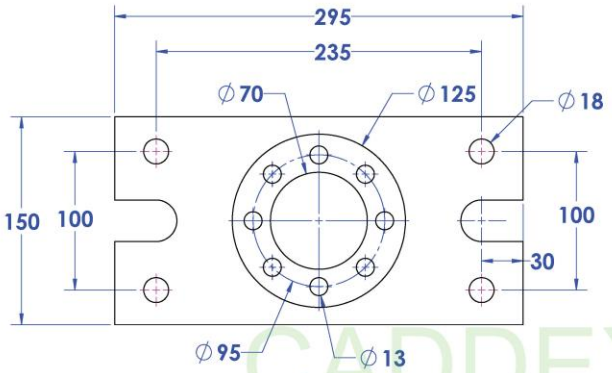

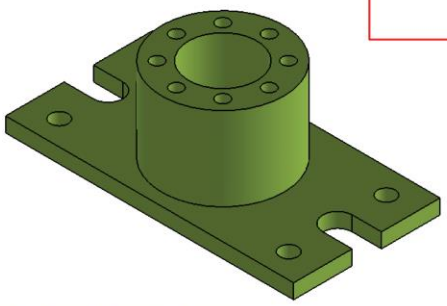

CADDEXPERT

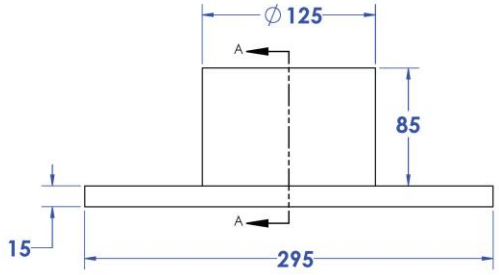

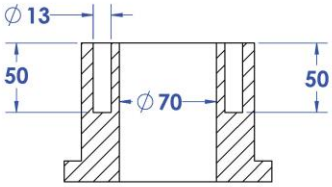

SECTION A-A
SCALE 1 : 2.4

CADDEXPERT.COM

CADDEXPERT.COM

134

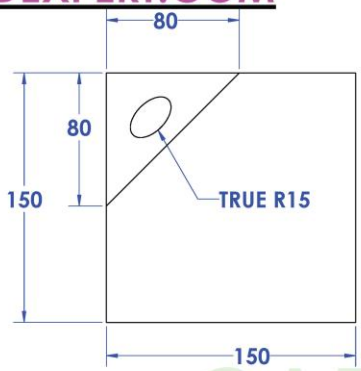

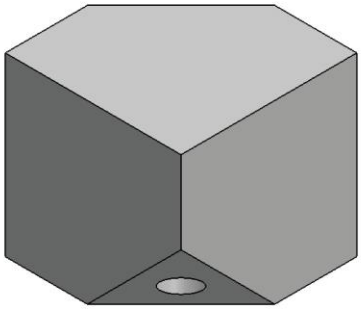

CADDEXPERT

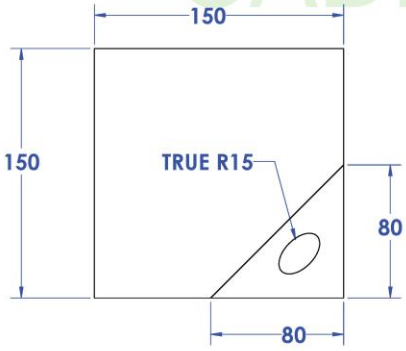

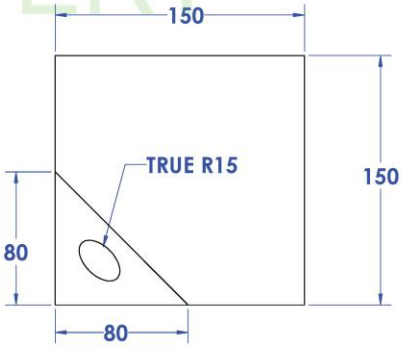

CADDEXPERT.COM