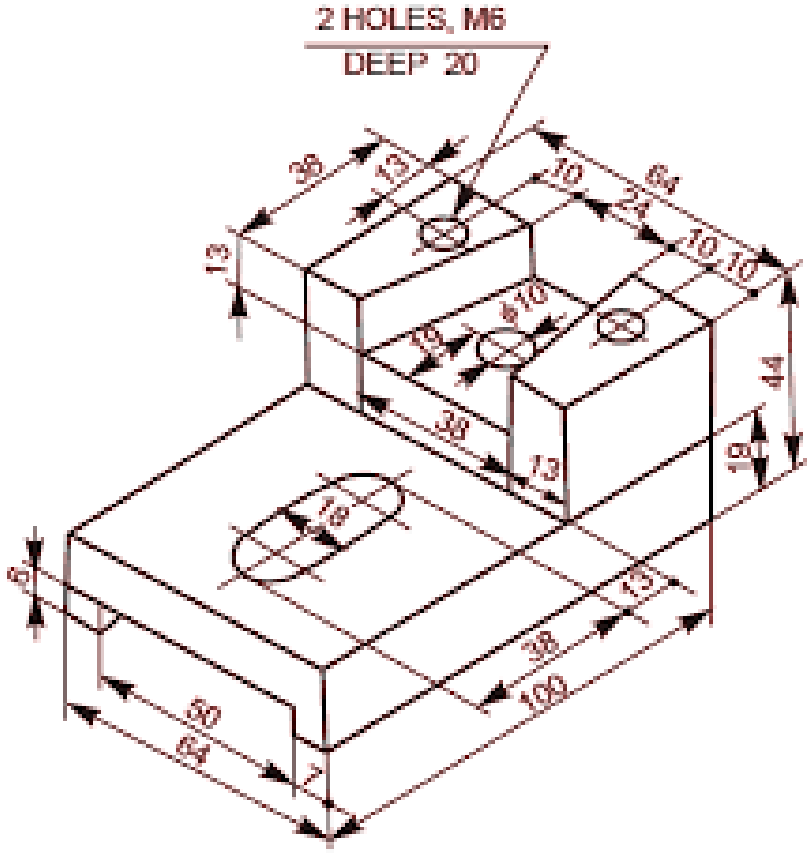
2 HOLES, M6
DEEP 20
38
13
10
64
24
10
10
13
ϕ10
18
44
38
13
19
18
6
13
38
100
50
64
7

16

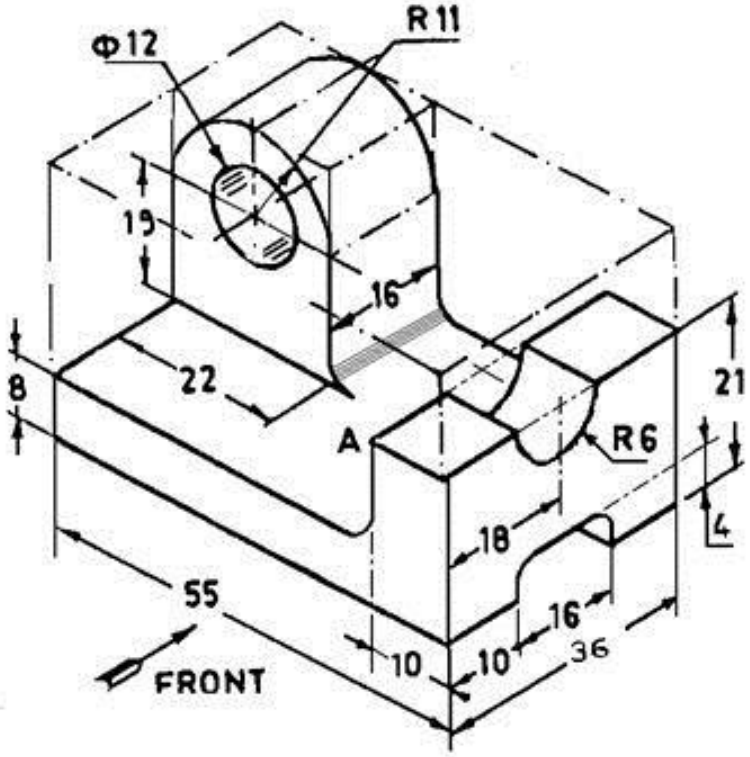
Φ12
R11
19
16
8
22
21
A
R6
4
18
55
16
10
10
36
FRONT

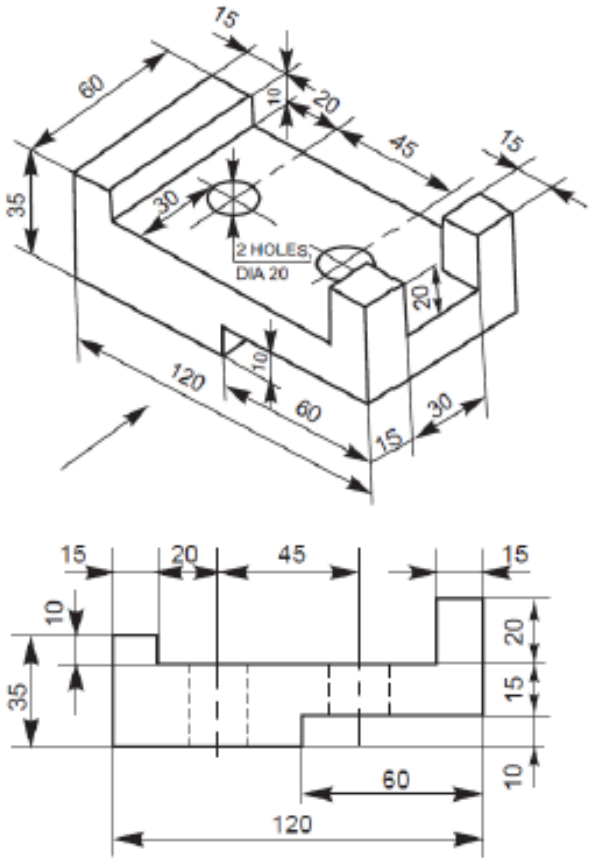

Model (1)

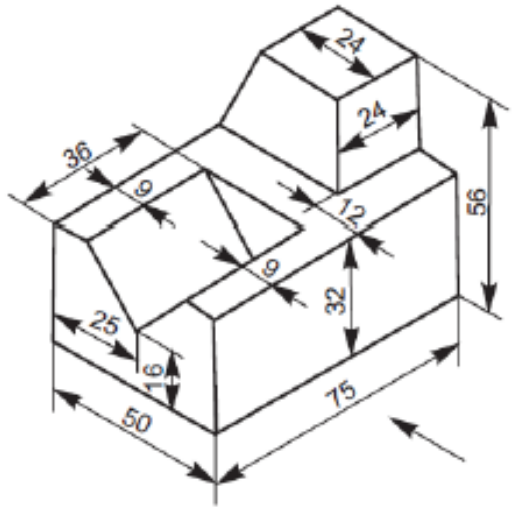

Model (2)

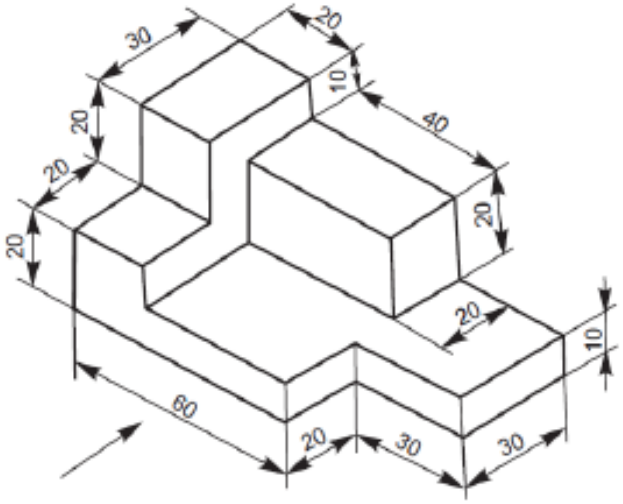

Model (3)

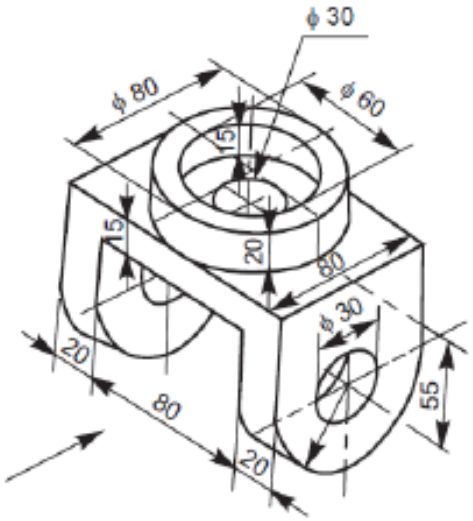

Model (4)

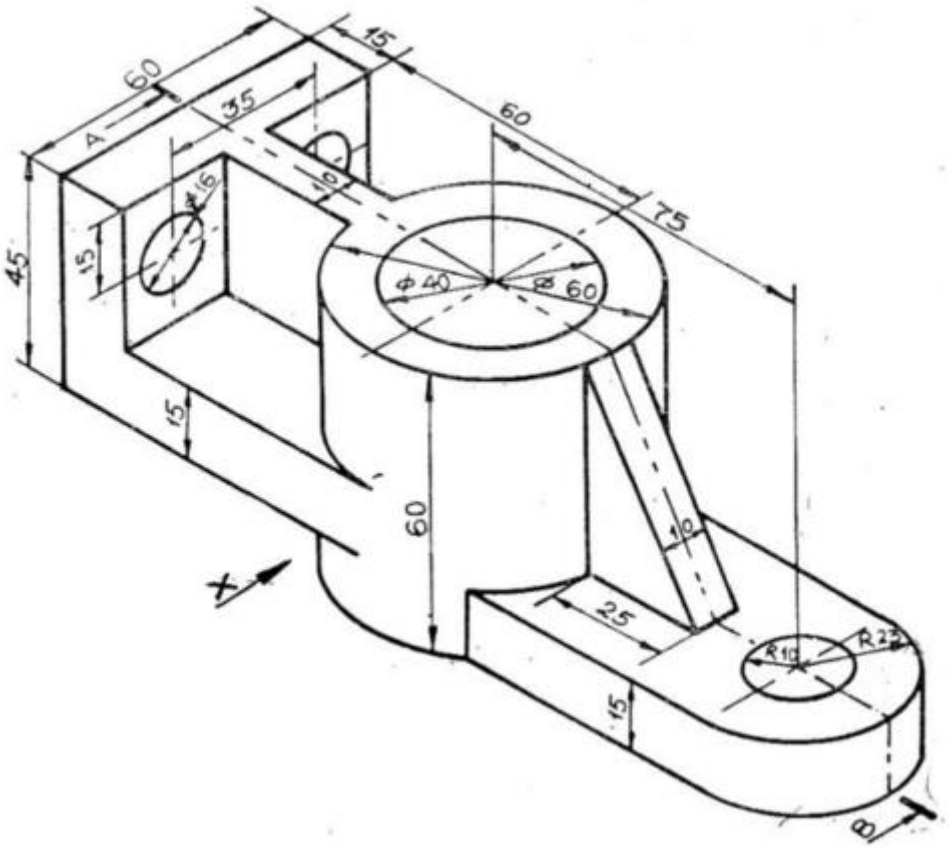
60
15
35
60
75
45
15
15
60
10
25
15
R10
R25
X
B

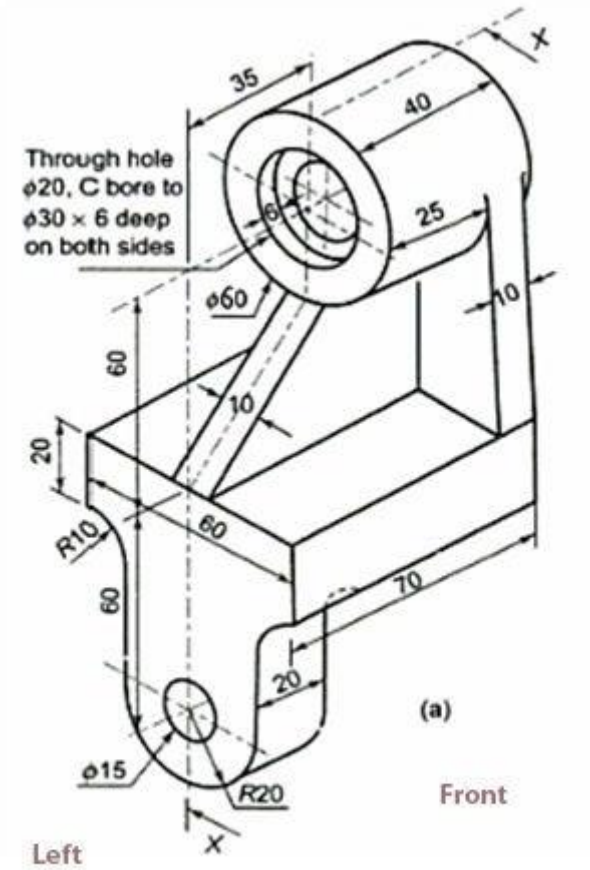
35
40
X
Through hole
ϕ20, C bore to
ϕ30 × 6 deep
on both sides
6
25
ϕ60
10
60
10
20
R10
60
70
60
20
(a)
ϕ15
R20
Front
X
Left

Fig. 3